BOYIOUV

CSBV

适用于气力输送/矿渣下料和高磨损浆液等工况

■ CSBV

CSBV

CSBV

压力等级范围

PN10,PN16,ANSI CL150;

口径范围

DN50~DN300/ANSI 2"~12"

设计标准

GB/T 9113 - 2010, ASME B16.5

GB/T 12221 - 2005

GB/T 13927 - 2008, JB/T 9092 - 1999, API 598

■

CSBV

CSBV

■

(ZrO2) (>99%Al2O3)

(Si3N4) CSBV

99%

CSBV

CSBV CSBV

ANSI/FCI 70 - 2 V

CSBV

ISO 5211

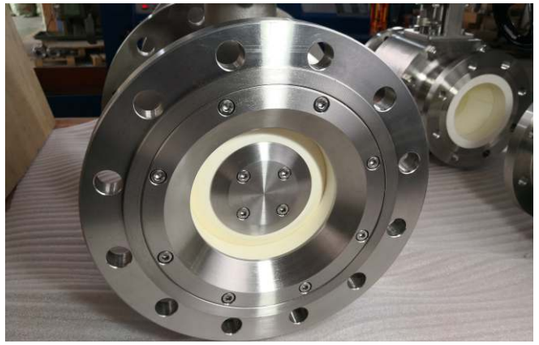

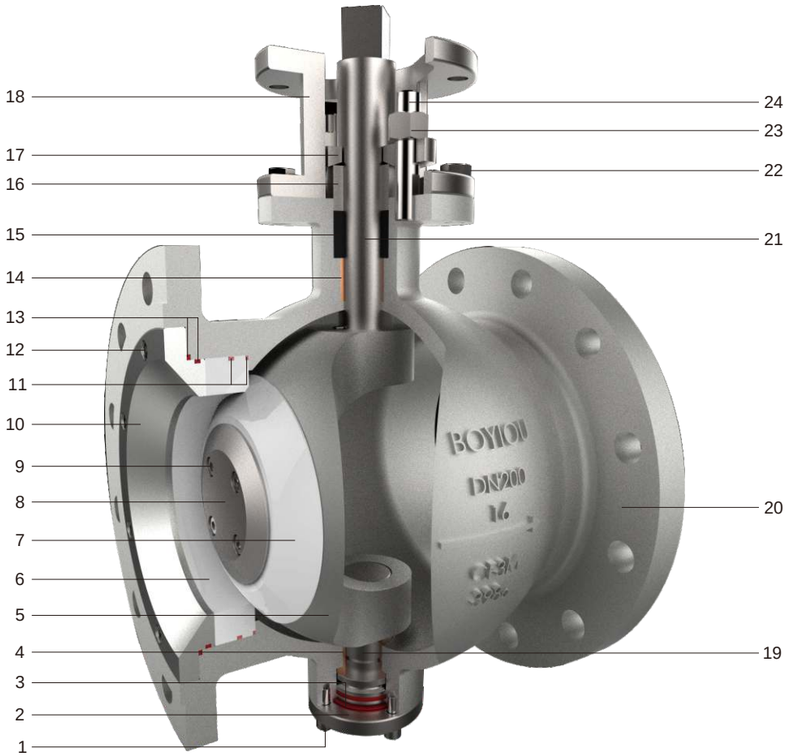

		A193 B7/A193 B8
2		A105/F304/F316L
3	O	VITON/VMQ
4		+ /PEEK
5		WCB/CF8/CF3M
6		
7		
8		A105/F304/F316L
9		A193 B7/A193 B8
10		A105/SS304/SS316L
11	O	VITON/VMQ
12		A193 B7/A193 B8
13	O	VITON/VMQ

14		+ /PEEK
15		PTFE/
16		SS304/SS316L
17		WCB/SS304
18		WCB/SS304
19		17 - 4PH/HC. 276
20		WCB/CF8/CF3M
21		17 - 4PH/HC. 276
22		A193 B7/A193 B8
23		A194 2H/A194 8
24		A193 B7/A193 B8

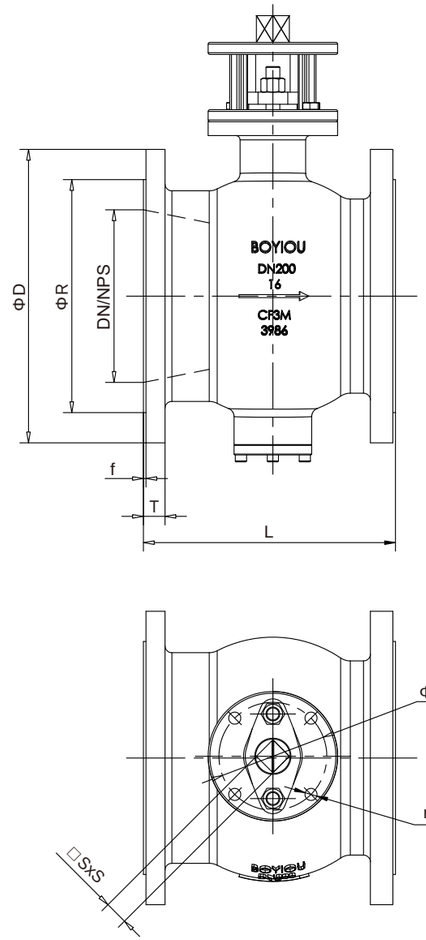

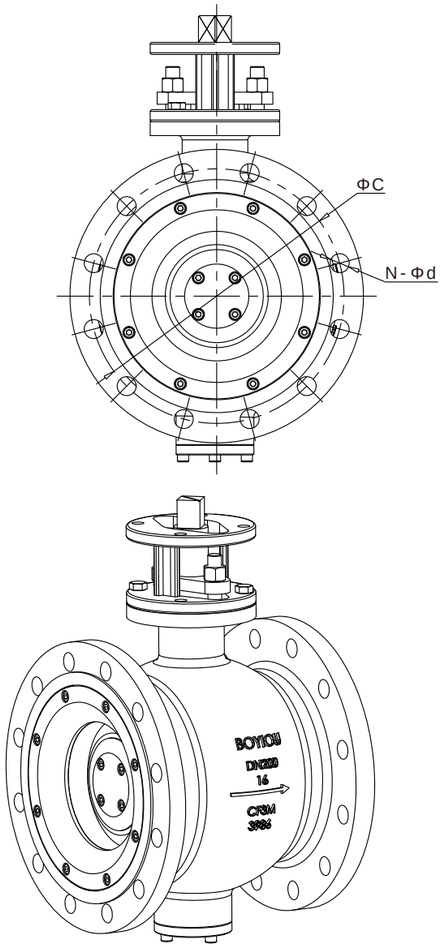

		L	□SxS	ΦK	n-Φd1	(GB/T 9113-2010 PN16,RF)					
DN	NPS					ΦD	ΦR	ΦC	N-Φd	T	f
DN50	2"	178	17x17	70	4-Φ10	165	102	125	4-Φ18	18	3
DN65	2-1/2"	190	19x19	70	4-Φ10	185	122	145	8-Φ18	18	3
DN80	3"	203	19x19	70	4-Φ10	200	138	160	8-Φ18	20	3
DN100	4"	229	22x22	102	4-Φ12	220	158	180	8-Φ18	20	3
DN125	5"	254	22x22	102	4-Φ12	250	188	210	8-Φ18	22	3
DN150	6"	267	22x22	102	4-Φ12	285	212	240	8-Φ22	22	3
DN200	8"	292	27x27	125	4-Φ14	340	268	295	12-Φ22	24	3
DN250	10"	330	27x27	125	4-Φ14	405	320	355	12-Φ26	26	3
DN300	12"	356	36x36	140	4-Φ18	460	378	410	12-Φ26	28	4

(ASME B16.5 CL 150,RF)					
ΦD	ΦR	ΦC	N-Φd	T	f
150	92.1	120.7	4-Φ19	18	2
180	104.8	139.7	4-Φ19	18	2
190	127.0	152.4	4-Φ19	20	2
230	157.2	190.5	8-Φ19	25	2
255	185.7	215.9	8-Φ23	25	2
280	215.9	241.3	8-Φ23	26	2
345	269.9	298.5	8-Φ23	29	2
405	323.8	362.0	12-Φ26	31	2
485	381.0	431.8	12-Φ26	33	2